Fluid Mechanics

The Energy Equation
[7]

Dr. Mohammad N. Almasri
http://sites.google.com/site/mohammadnablus/Home

Introduction

- There are various types of devices and components that are utilized in flow systems

- They occur in most fluid flow systems and they either:
  - add energy to the fluid (in the case of pumps)
  - remove energy from the fluid (in the case of turbines), or
  - cause undesirable losses of energy from the fluid (in the case of friction)

Pumps

- A pump is a common example of a mechanical device that adds energy to a fluid

- An electric motor or some other prime power device drives a rotating shaft in the pump. The pump then *takes this kinetic energy and delivers it to the fluid*, resulting in fluid flow and increased fluid pressure

Pumps

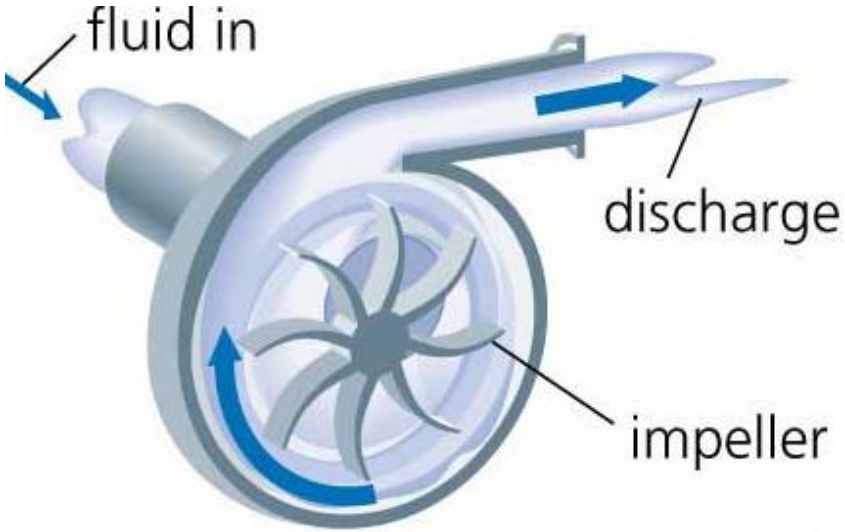

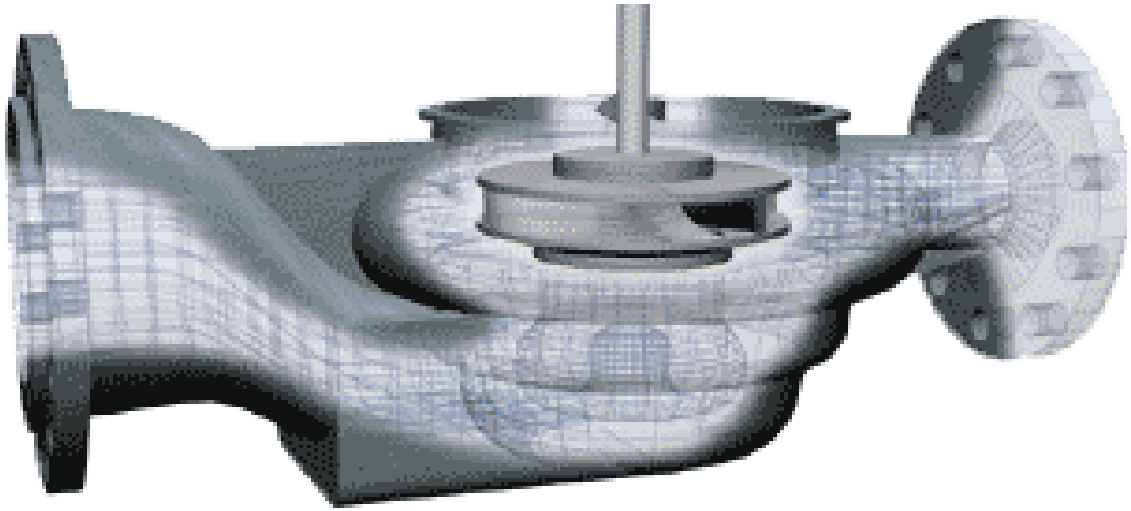

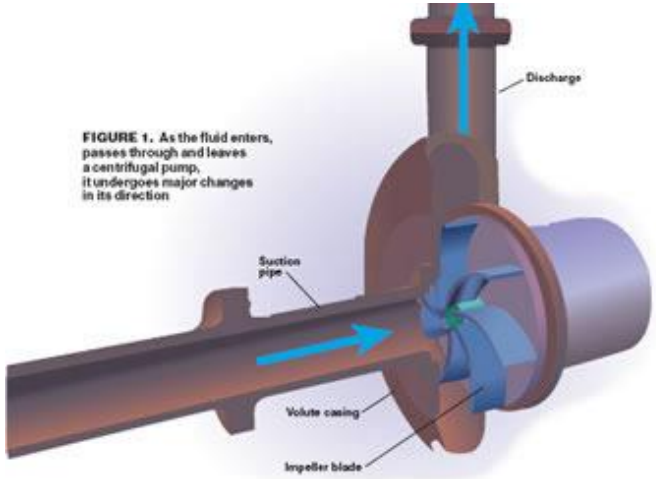

FIGURE 1. As the fluid enters, passes through and leaves a centrifugal pump, it undergoes major changes in its direction

Turbines

- Turbines are examples of devices that *take energy from a fluid* and deliver it in the form of work, causing the rotation of a shaft

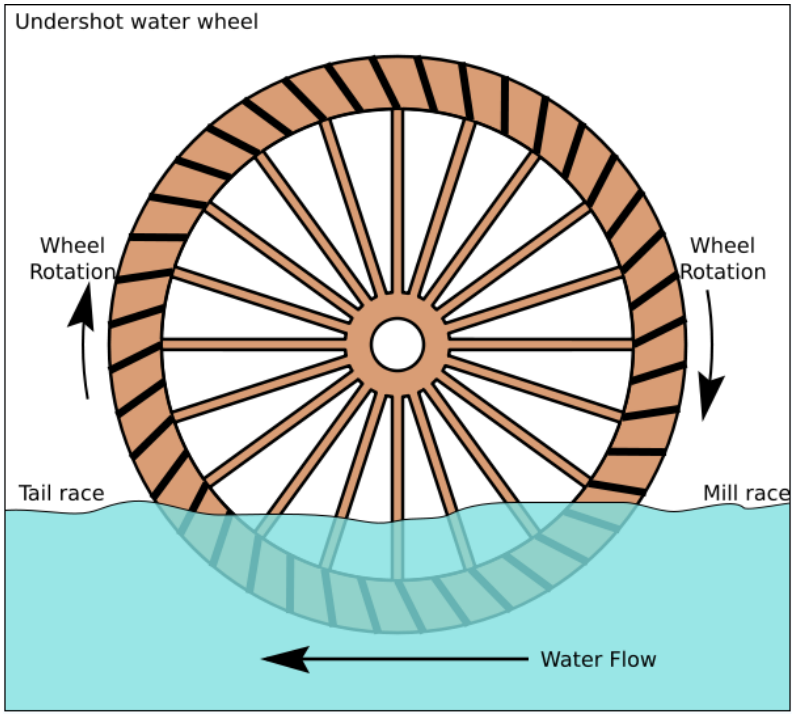

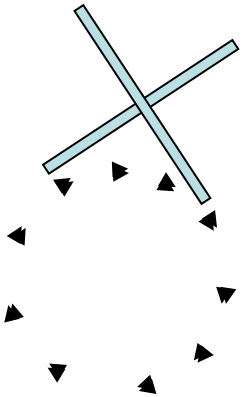

Turbines

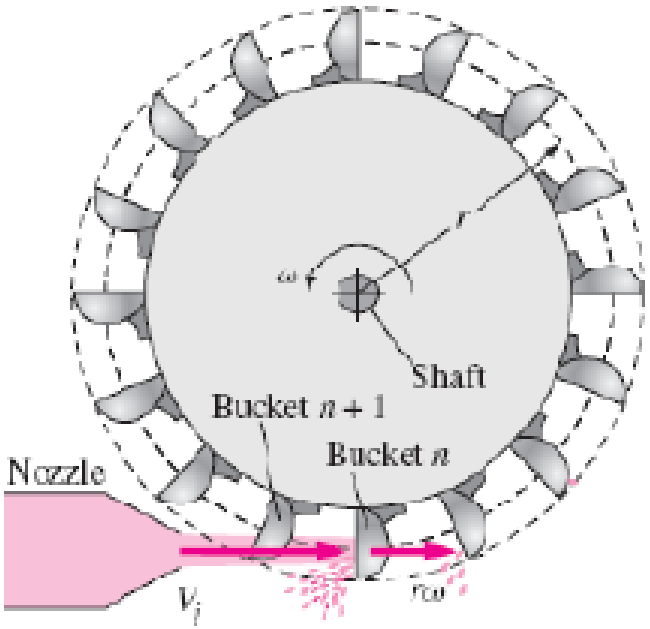
ω
r
Shaft
Bucket n + 1
Bucket n
Nozzle
V_j
$r\omega$

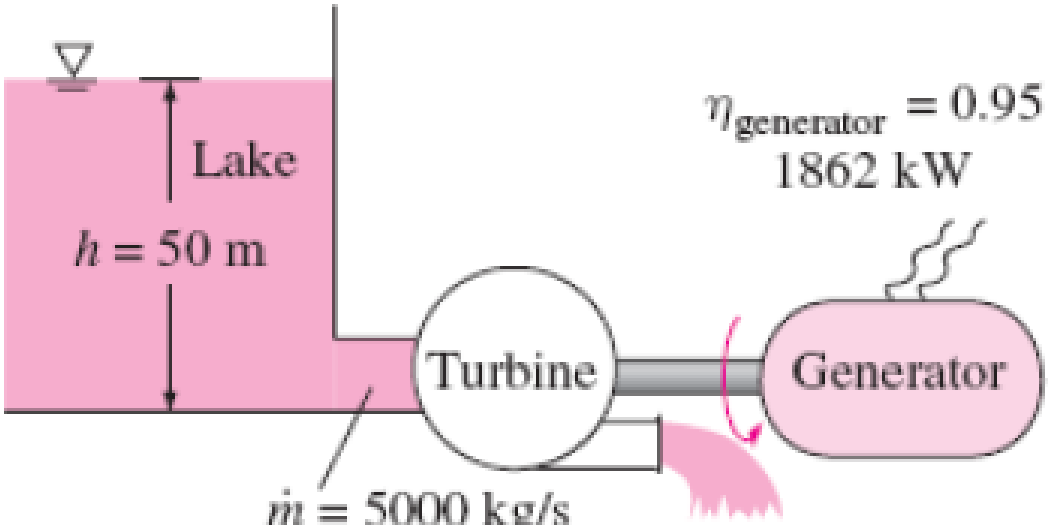
Lake
h = 50 m
$\eta_{generator} = 0.95$
1862 kW
Turbine
Generator
$\dot{m}$ = 5000 kg/s

Turbines

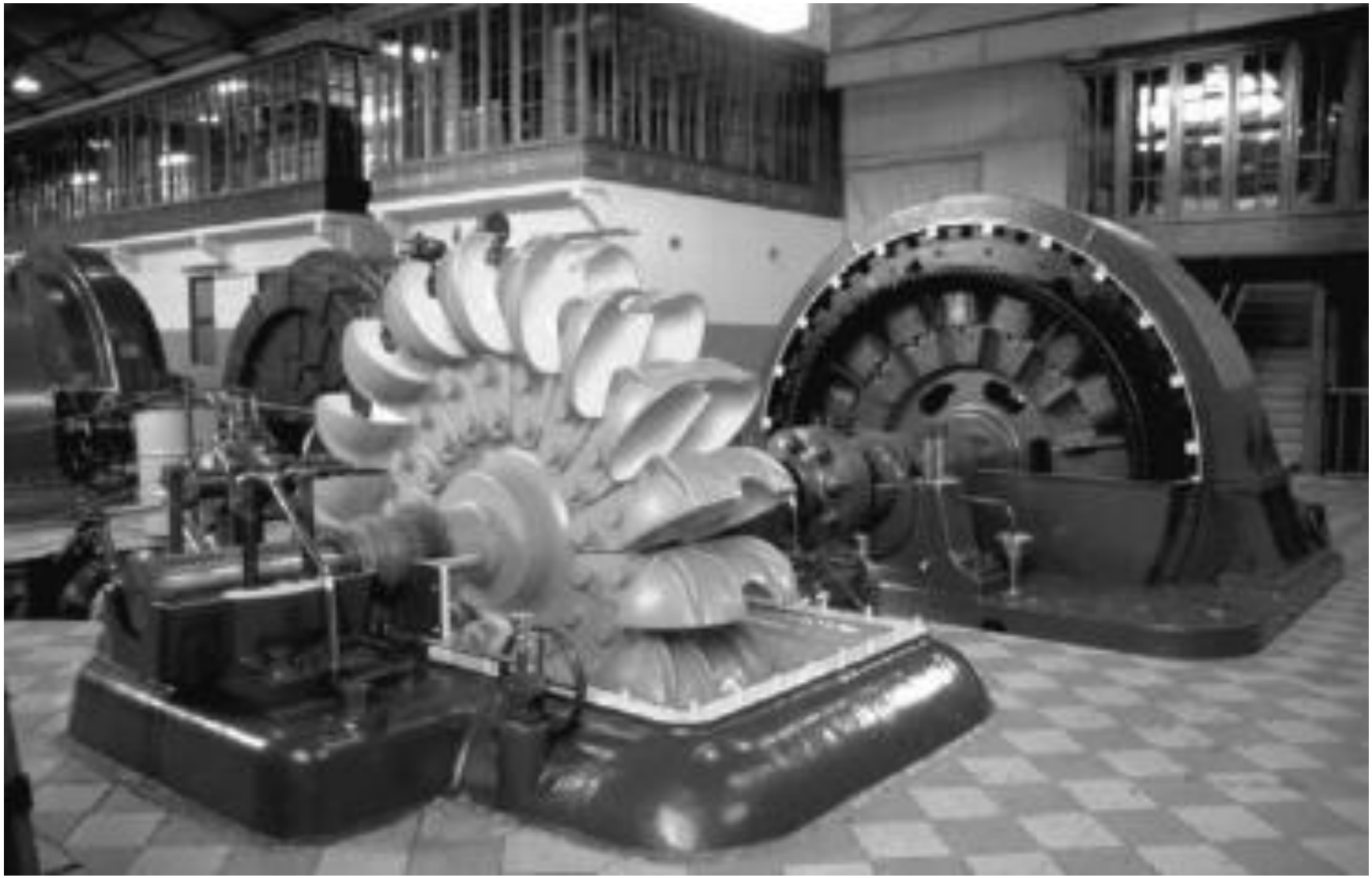

Turbines

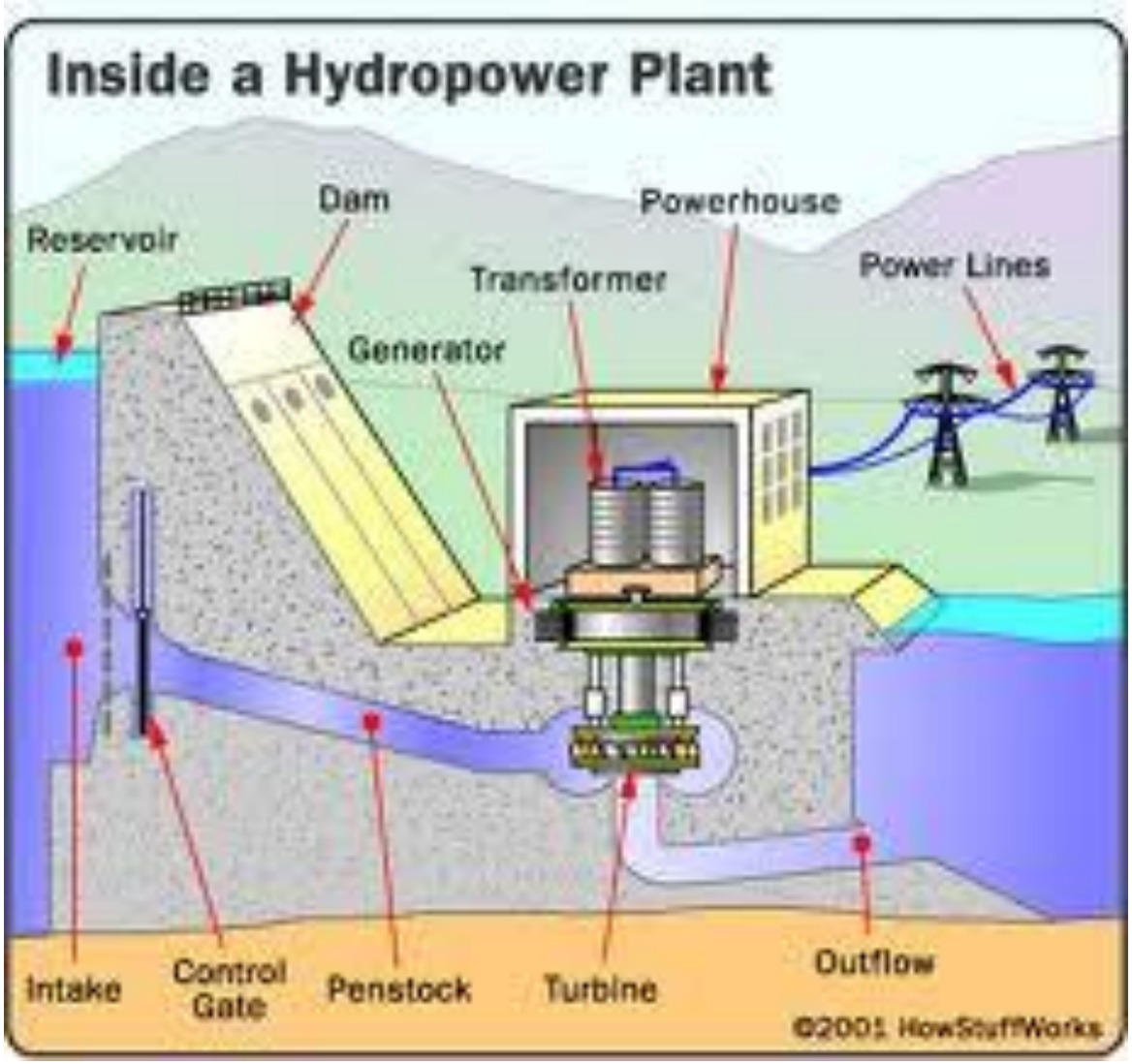
Inside a Hydropower Plant
Dam
Powerhouse
Reservoir
Transformer
Power Lines
Generator
Intake
Control Gate
Penstock
Turbine
Outflow
©2001 HowStuffWorks

Fluid Friction

- A fluid in motion suffers losses in energy into thermal energy (heat) due to friction

- Heat is dissipated through the walls of the pipe in which the fluid is flowing

- The magnitude of the energy loss (called headloss) is dependent on
  - *the properties of the fluid*
  - *the flow velocity*
  - *the pipe size*
  - *the smoothness of the pipe wall*
  - *the length of the pipe*

Headloss in pipes due to Friciton

- Generally, headloss in the pipes due to friction is given in the following general form (later we will see different forms):

$$h_L = constant \times \frac{L}{D}\frac{v^2}{2g}$$

- where h_L is the headloss due to friction, L is the length, D is the diameter, v is the velocity, and the constant depends on the status of the internal surface of the pipe, its type, viscosity of the fluid,

- Apparently, the h_L increases linearly with pipe length

Valves and Fittings

- Elements that control the direction or flow rate of a fluid in a system typically set up local turbulence in the fluid, causing energy to be dissipated as heat

- Whenever there is a restriction, a change in flow velocity, or a change in the direction of flow, these energy losses occur

Headloss due to Abrupt Expansion

The headloss caused by s sudden expansion is given by the following relationship:

$$h_L = \frac{(V_1 - V_2)^2}{2g}$$

$$h_L = K_{exp}\frac{(V_1)^2}{2g}$$

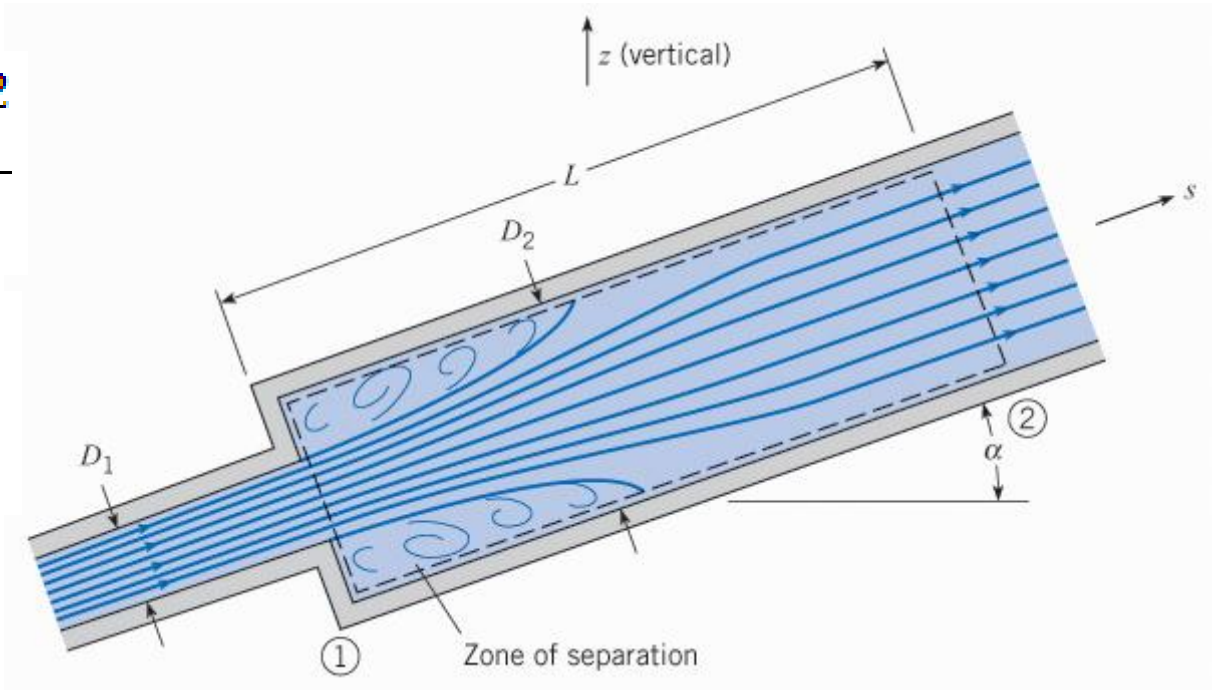

Headloss due to Abrupt Contraction

The headloss caused by a sudden contraction is given by the following relationship:

$$h_L = K_{cont}\frac{(V_2)^2}{2g}$$

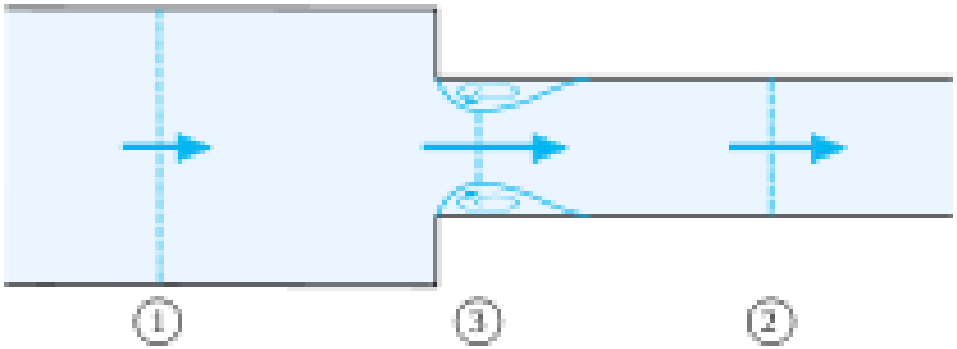

The Energy Equation

Now what we need to do is to update Bernoulli equation to account for the addition, removal, and losses in energy

The Energy Equation

- Take a control volume and do an energy balance

- Energy can **enter** the control volume in two ways:
  - Energy transported by the flowing fluid
  - By a pump
- Energy can **leave** the control volume in three ways:
  - Energy transported by the flowing fluid
  - By a turbine
  - By headloss (to heat)

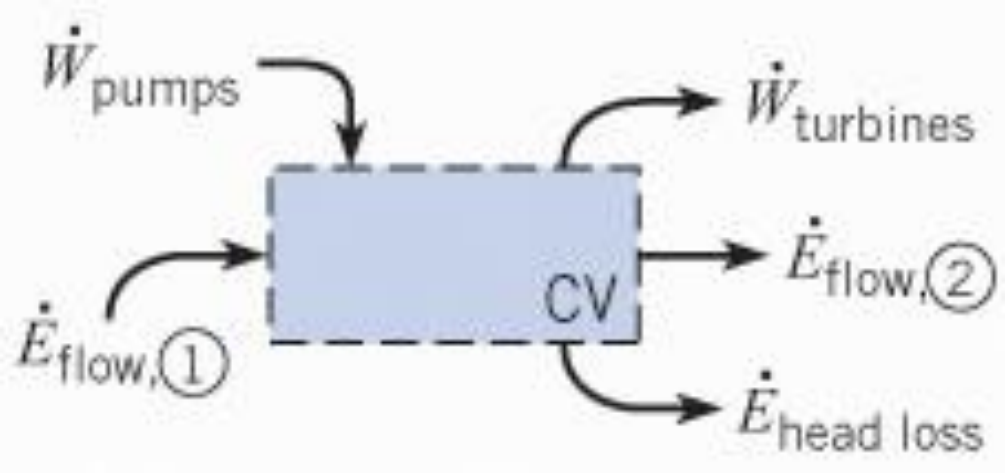

The Energy Equation

- However, we will deal with **head** rather than energy or work

- *Head is the energy of the fluid per weight of fluid*

- This implies that:
  - h_p: head added by the pump (pump head)
  - h_t: head extracted by the turbine (turbine head)
  - h_L: head loss due to friction

The Energy Equation

Head carried by flow into the CV + Head added by pumps

=

Head carried by flow out of the CV + Head extracted by turbines + Head loss

The Energy Equation

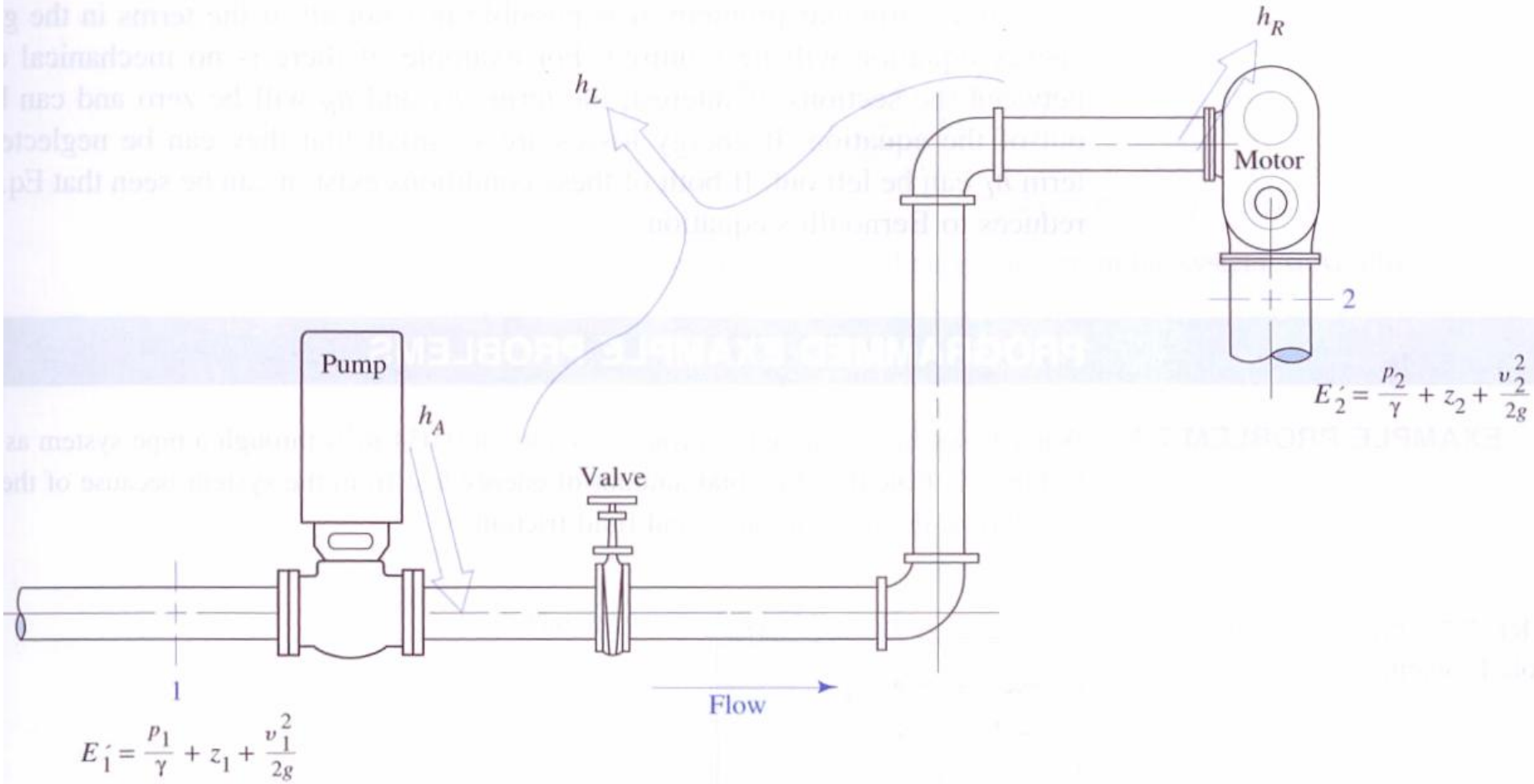

The Energy Equation

- It is essential that the general energy equation be written in the direction of flow

- After the fluid leaves point 1 it enters the pump, where energy is added (h_p). A motor drives the pump, and the impeller of the pump transfers the energy to the fluid (h_p)

- Then the fluid flows through a piping system composed of a valve, elbows, and the lengths of pipe, in which energy is dissipated from the fluid and is lost (h_p)

- Before reaching point 2, the fluid flows through a fluid motor, which removes some of the energy to drive an external device (h_t)

The Energy Equation

$$\frac{P_1}{\gamma} + z_1 + \alpha_1 \frac{v_1^2}{2g} + h_p = \frac{P_2}{\gamma} + z_2 + \alpha_2 \frac{v_2^2}{2g} + h_t + h_L$$

where α is the kinetic energy correction factor. This factor accounts for the cases when the velocity profile is not uniformly distributed. However, in all the cases that we will come across, we will use $\alpha = 1$

$$\boxed{\frac{P_1}{\gamma} + z_1 + \frac{v_1^2}{2g} + h_p = \frac{P_2}{\gamma} + z_2 + \frac{v_2^2}{2g} + h_t + h_L}$$

Example

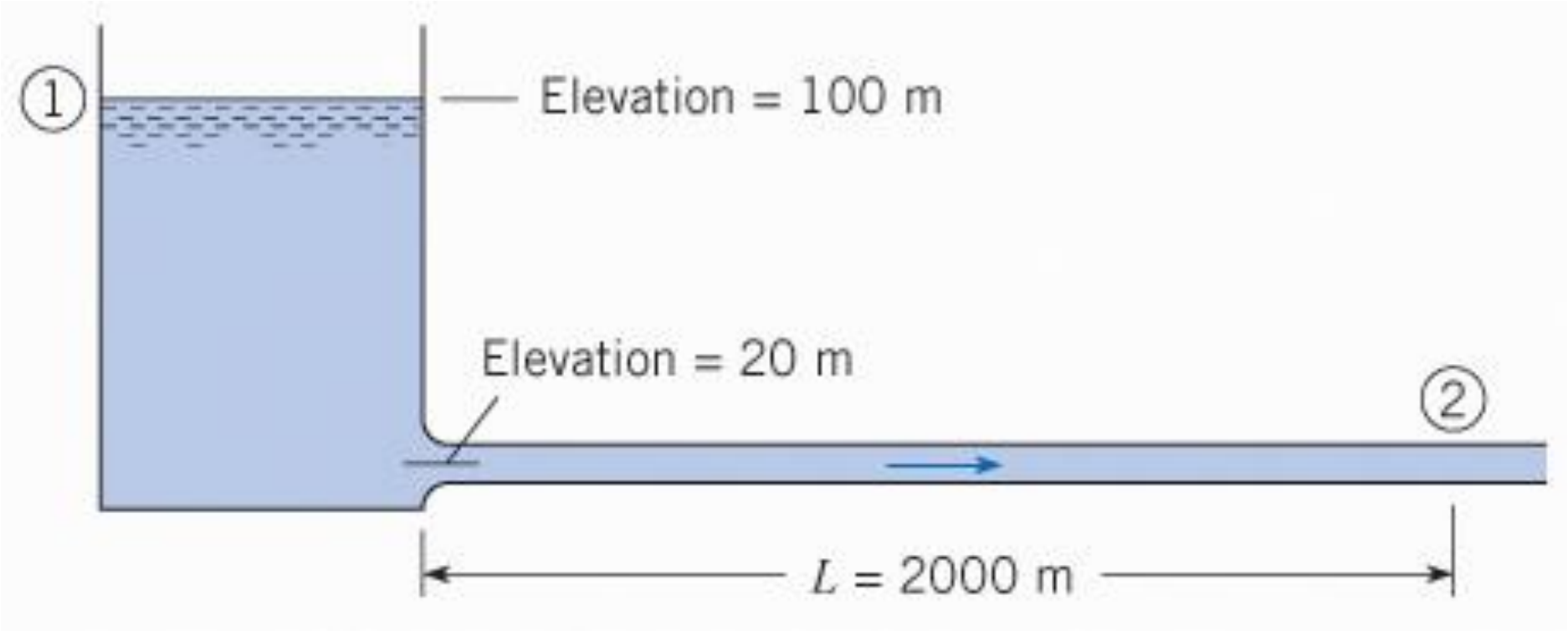

Example

- A horizontal pipe carries cooling water at 10°C from a reservoir. The head loss in the pipe is:

$$h_L = \frac{0.02(L/D)V^2}{2g}$$

where L is the length of the pipe from the reservoir to the point in question, V is the mean velocity in the pipe, and D is the diameter of the pipe

- If the pipe diameter is 20 cm and the rate of flow is 0.06 m^3/s, what is the pressure in the pipe at L = 2000 m. Assume $\alpha_2 = 1$

Example

1. Energy equation (general form)

$$\frac{p_1}{\gamma} + \alpha_1 \frac{\overline{V}_1^2}{2g} + z_1 + h_p = \frac{p_2}{\gamma} + \alpha_2 \frac{\overline{V}_2^2}{2g} + z_2 + h_t + h_L$$

2. Term-by-term analysis
   - $p_1 = 0$ because the pressure at top of a reservoir is $p_{atm} = 0$ gage.
   - $V_1 \approx 0$ because the level of the reservoir is constant or changing very slowly.
   - $z_1 = 100$ m; $z_2 = 20$ m.
   - $h_p = h_t = 0$ because there are no pumps or turbines in the system.
   - Find V_2 using the flow rate

$$V_2 = \frac{Q}{A} = \frac{0.06 \text{ m}^3/\text{s}}{(\pi/4)(0.2 \text{ m})^2} = 1.910 \text{ m/s}$$

- Head loss is

$$h_L = \frac{0.02(L/D)V^2}{2g} = \frac{0.02(2000\ \text{m}/0.2\ \text{m})(1.910\ \text{m/s})^2}{2(9.81\ \text{m/s}^2)}$$

$$= 37.2\ \text{m}$$

3. Combine steps 1 and 2.

$$(z_1 - z_2) = \frac{p_2}{\gamma} + \alpha_2 \frac{\overline{V}_2^2}{2g} + h_L$$

$$80\ \text{m} = \frac{p_2}{\gamma} + 1.0\frac{(1.910\ \text{m/s})^2}{2(9.81\ \text{m/s}^2)} + 37.2\ \text{m}$$

$$80\ \text{m} = \frac{p_2}{\gamma} + (0.186\ \text{m}) + (37.2\ \text{m})$$

$$p_2 = \gamma(42.6\ \text{m}) = (9810\ \text{N/m}^3)(42.6\ \text{m}) = \boxed{418\ \text{kPa}}$$

Example

Power Required by Pumps

- Power is defined as the rate of doing work
- The unit of power is watt (W)
- This is equivalent to N.m/s or J/s
- $P = \gamma Q h_p$

  where P is the power added by the pump to the fluid, γ is the specific weight of the fluid, and Q is the volume flow rate

Power Required by Pumps

- Both pumps and turbines lose energy due to mechanical factors

- To account for these losses, we use the term pump efficiency η or e

- The efficiency is the ratio of power output from the pump (P_{out}) to power input to the pump (P_{in})

$$\eta = P_{out}/P_{in}$$

$$e = P_{out}/P_{in}$$

Power Required by Pumps

$$Power\ added\ (KW) = \frac{\gamma Q H}{1{,}000}$$

$$Power\ required\ (KW) = \frac{\gamma Q H}{1{,}000\ e}$$

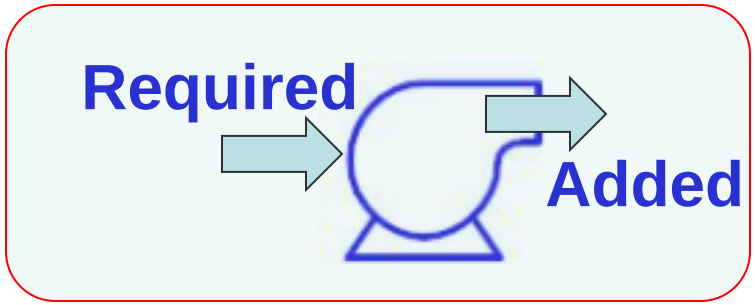

γ: Specific weight (N/m^3)

Q: Flow rate (m^3/s)

H: Head added by pump (m)

e: [-]

Power Required by Pumps

- Each one horsepower (HP) is equivalent to 746 Watts

$$Power = \frac{\gamma Q h_p}{550}$$

where Q in ft^3/sec, hp in ft, γ in lb/ft^3, and the power is in HP

Example

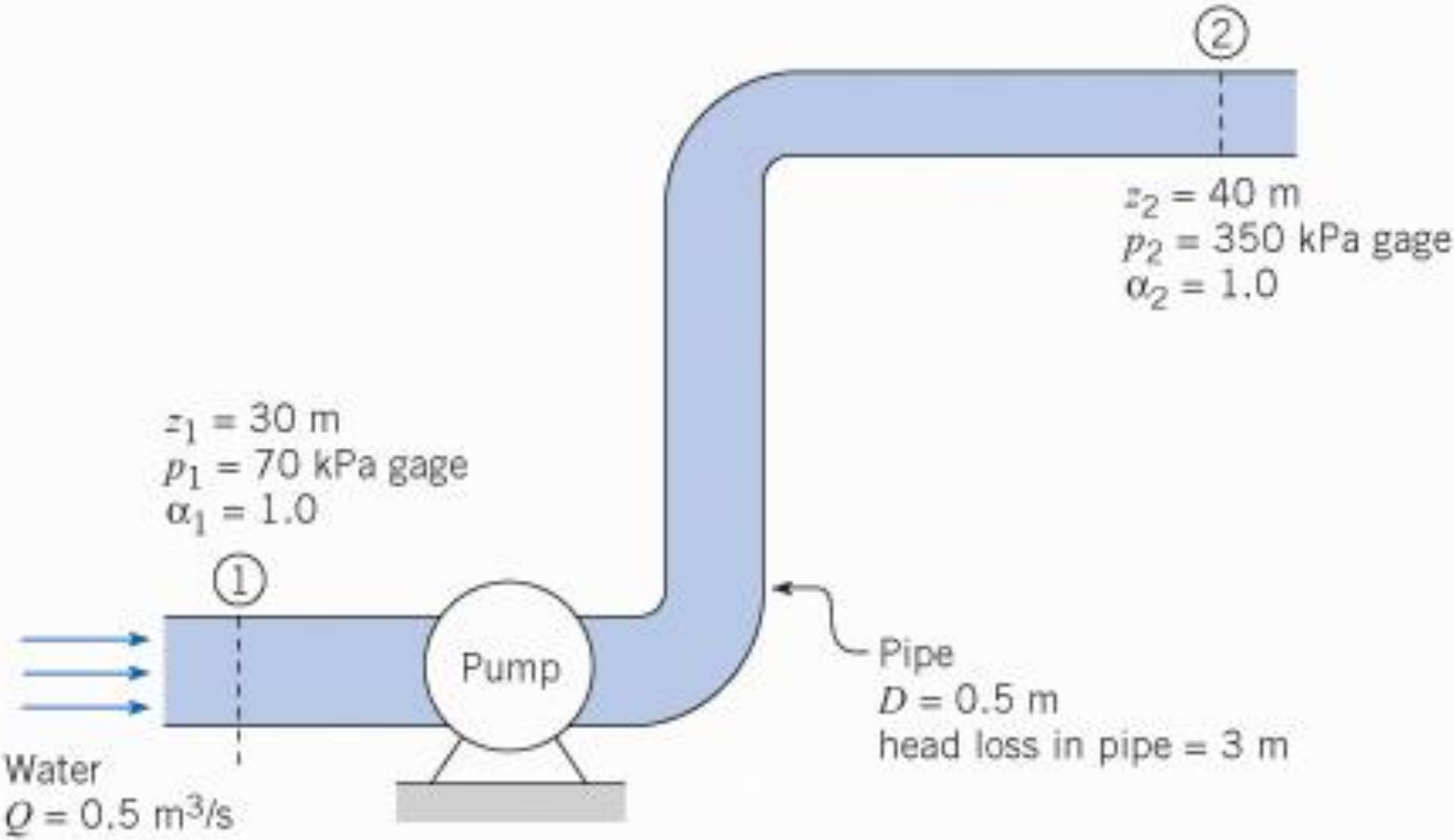
2
z_2 = 40 m
p_2 = 350 kPa gage
α_2 = 1.0
z_1 = 30 m
p_1 = 70 kPa gage
α_1 = 1.0
1
Pump
Pipe
D = 0.5 m
head loss in pipe = 3 m
Water
Q = 0.5 m^3/s

Example

- A pipe 50 cm in diameter carries water (10°C) at a rate of 0.5 m^3/s. A pump in the pipe is used to move the water from an elevation of 30 m to 40 m

- The pressure at section 1 is 70 kPa gage and the pressure at section 2 is 350 kPa gage

- What power in kilowatts and in horsepower must be supplied to the flow by the pump?

- Assume h_L = 3 m and $\alpha_1 = \alpha_2 = 1$

Example

1. Energy equation (general form)

$$\frac{p_1}{\gamma} + \alpha_1 \frac{\overline{V}_1^2}{2g} + z_1 + h_p = \frac{p_2}{\gamma} + \alpha_2 \frac{\overline{V}_2^2}{2g} + z_2 + h_t + h_L$$

2. Term-by-term analysis
   - Velocity head cancels because $V_1 = V_2$.
   - $h_t = 0$ because there are no turbines in the system.
   - All other head terms are given.
   - Inserting terms into the general equation gives

$$\frac{p_1}{\gamma} + z_1 + h_p = \frac{p_2}{\gamma} + z_2 + h_L$$

Example

3. Pump head (from step 2)

$$h_p = \left(\frac{p_2 - p_1}{\gamma}\right) + (z_2 - z_1) + h_L$$

$$= \left(\frac{(350{,}000 - 70{,}000)\ \text{N/m}^2}{9810\ \text{N/m}^3}\right) + (10\ \text{m}) + (3\ \text{m})$$

$$= (28.5\ \text{m}) + (10\ \text{m}) + (3\ \text{m}) = 41.5\ \text{m}$$

4. Power equation

$$P = \gamma Q h_p$$

$$= (9810\ \text{N/m}^3)(0.5\ \text{m}^3/\text{s})(41.5\ \text{m})$$

$$= \boxed{204\ \text{kW}}$$

Example

- A small hydroelectric power plant takes a discharge of 14.1 m^3/s through an elevation drop of 61 m
- The head loss through the intakes, penstock, and outlet works is 1.5 m. The combined efficiency of the turbine and electrical generator is 87%
- What is the rate of power generation?

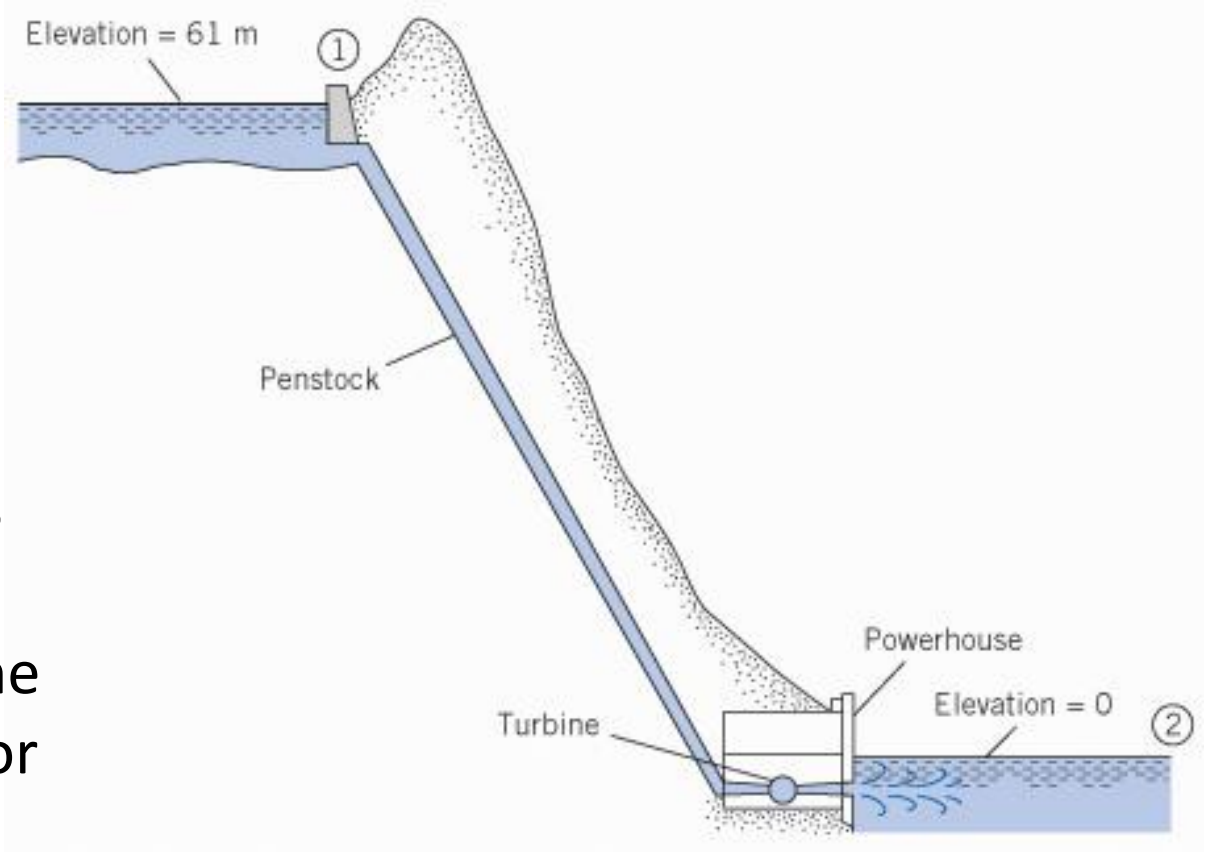

Example

1. Energy equation (general form)

$$\frac{p_1}{\gamma} + \alpha_1 \frac{\overline{V}_1^2}{2g} + z_1 + h_p = \frac{p_2}{\gamma} + \alpha_2 \frac{\overline{V}_2^2}{2g} + z_2 + h_t + h_L$$

2. Term-by-term analysis
   - Velocity heads are negligible because $V_1 \approx 0$ and $V_2 \approx 0$.
   - Pressure heads are zero because $p_1 = p_2 = 0$ gage.
   - $h_p = 0$ because there is no pump in the system.
   - Elevation head terms are given.

Example

3. Combine steps 1 and 2:

$$h_t = (z_1 - z_2) - h_L$$
$$= (61\ \text{m}) - (1.5\ \text{m}) = 59.5\ \text{m}$$

Interpretation: Head supplied to the turbine (59.5 m) is equal to the net elevation change of the dam (61 m) minus the head loss (1.5 m).

4. Power equation

$$P_{\text{input to turbine}} = \gamma Q h_t = (9810\ \text{N/m}^3)(14.1\ \text{m}^3/\text{s})(59.5\ \text{m})$$
$$= 8.23\ \text{MW}$$

5. Efficiency equation

$$P_{\text{output from generator}} = \eta P_{\text{input to turbine}} = 0.87(8.23\ \text{MW})$$
$$= \boxed{7.16\ \text{MW}}$$

Example

Water (10°C) is flowing at a rate of 0.35 m^3/s, and it is assumed that $h_L = 2V^2/2g$ from the reservoir to the gage, where V is the velocity in the 30-cm pipe. What power must the pump supply? Assume α = 1.0 at all locations

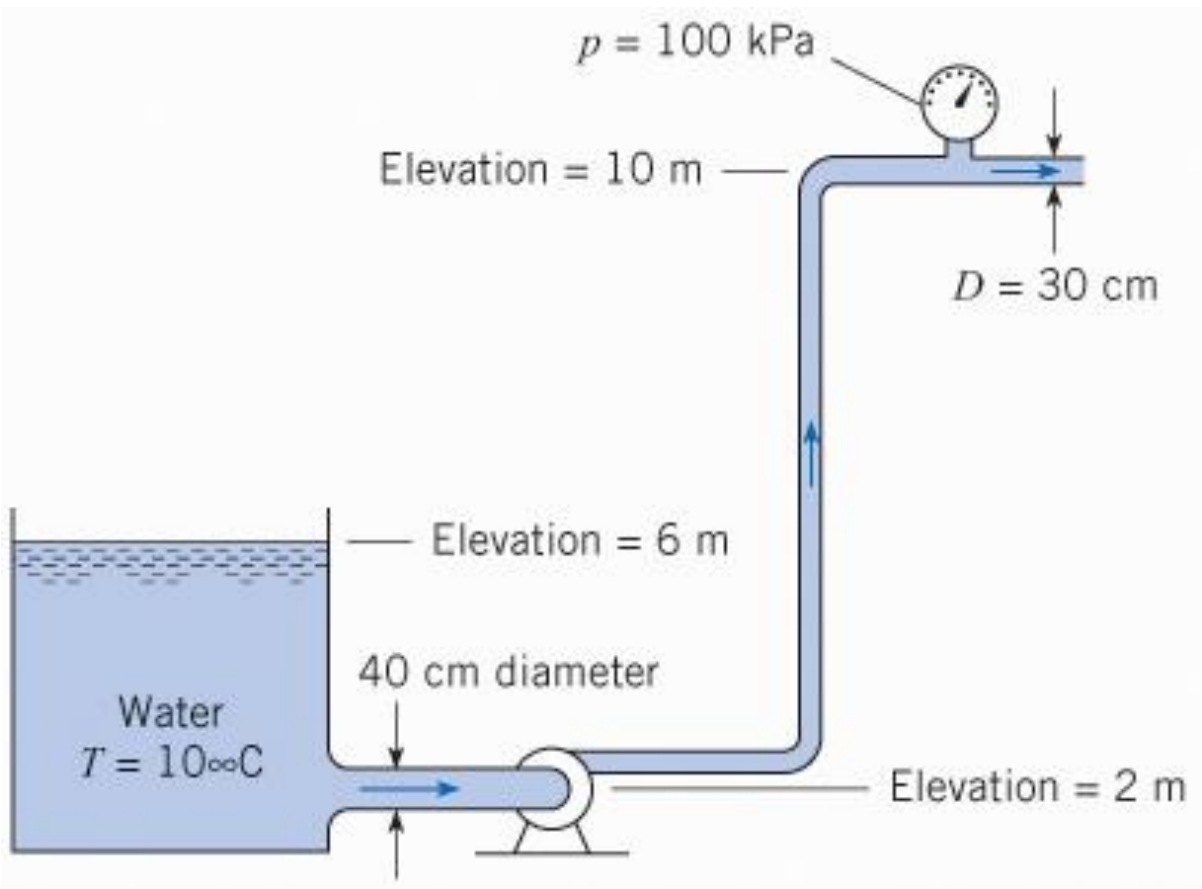

Example

$$
\begin{aligned}
V &= \frac{Q}{A} \\
&= \frac{0.35}{(\pi/4)\times(0.3\,\mathrm{m})^2} \\
&= 4.95\ \mathrm{m/s} \\
\frac{V_2^2}{2g} &= 1.250\ \mathrm{m}
\end{aligned}
$$

Energy equation (locate 1 on the reservoir surface; locate 2 at the pressure gage)

$$
\begin{aligned}
0+0+6\,\mathrm{m}+h_p &= \frac{100000\,\mathrm{Pa}}{9810\,\mathrm{N/m^3}}+1.25\,\mathrm{m}+10\,\mathrm{m}+2.0\,(1.25\,\mathrm{m}) \\
h_p &= 17.94\,\mathrm{m}
\end{aligned}
$$

Power equation:

$$
\begin{aligned}
P &= Q\gamma h_p \\
&= \left(0.35\,\mathrm{m^3/s}\right)\left(9810\,\mathrm{N/m^3}\right)(17.94\,\mathrm{m}) \\
&\boxed{P = 61.6\,\mathrm{kW}}
\end{aligned}
$$

Example

- In the pump test shown, the rate of flow is 0.16 m^3/s of oil (S = 0.88)

- Calculate the horsepower that the pump supplies to the oil if there is a differential reading of 120 cm of mercury in the U-tube manometer. Assume $\alpha = 1.0$ at all locations

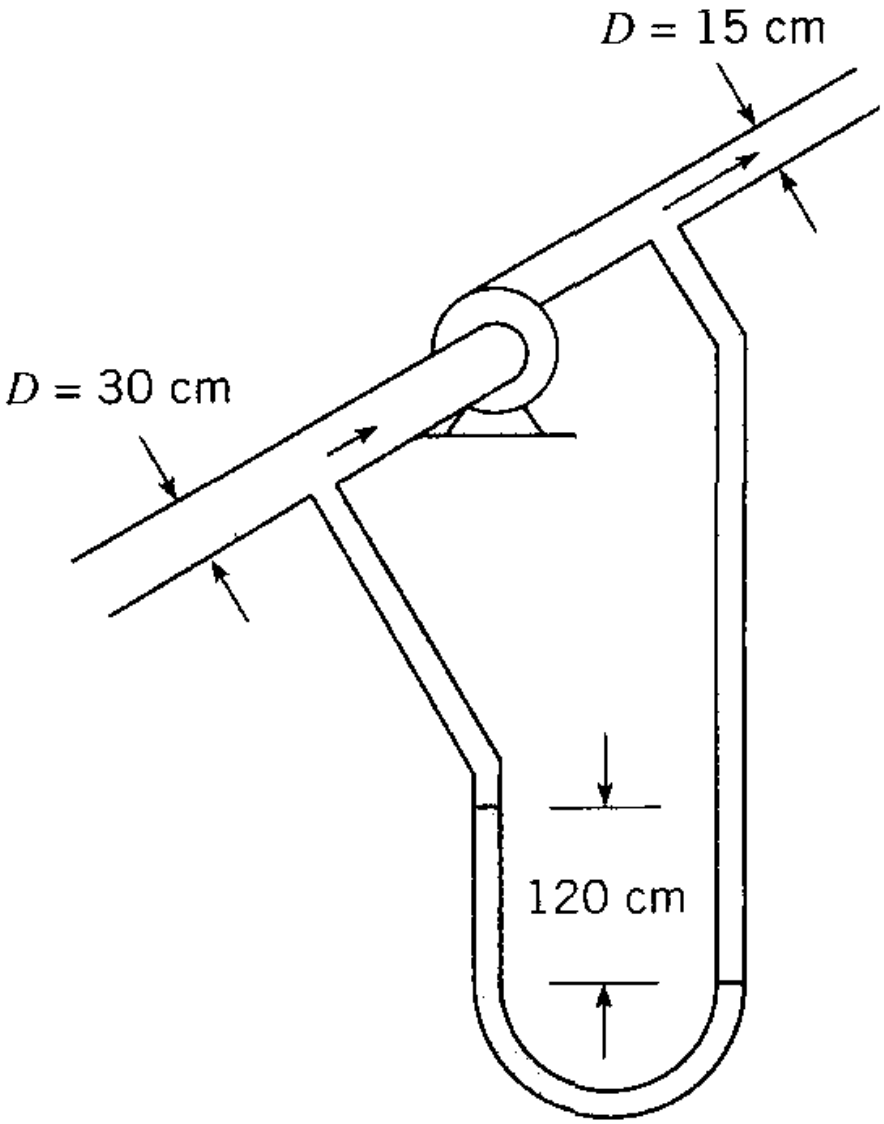

Example

$$
\begin{aligned}
V_{12} &= \frac{Q}{A_{12}} = \frac{0.16\,\mathrm{m}^3/\mathrm{s}}{(\pi/4)\times(0.3\,\mathrm{m})^2} = 2.26\,\mathrm{m}/\mathrm{s} \\
V_{12}^2/2g &= 0.260\ \mathrm{m} \\
V_6 &= 4V_{12} = 9.04\ \mathrm{m/s} \\
V_6^2/2g &= 4.165\ \mathrm{m}
\end{aligned}
$$

Energy equation

$$
\begin{aligned}
\left(\frac{p_6}{\gamma}+z_6\right)-\left(\frac{p_{12}}{\gamma}+z_{12}\right) &= \frac{(13.55-0.88)\left(\frac{120}{100}\,\mathrm{m}\right)}{0.88} \\
\left(\frac{p_{12}}{\gamma}+z_{12}\right)+\frac{V_{12}^2}{2g}+h_p &= \left(\frac{p_6}{\gamma}+z_6\right)+\frac{V_6^2}{2g} \\
h_p &= \left(\frac{13.55}{0.88}-1\right)\times 1.2\,\mathrm{m}+4.165\,\mathrm{m}-0.260\,\mathrm{m} \\
h_p &= 21.18\ \mathrm{m}
\end{aligned}
$$

Example

Power equation

$$
\begin{aligned}
P\,(\mathrm{kW}) &= Q\gamma h_p \\
P &= 0.16\,\mathrm{m^3/s} \times \left(0.88 \times 9800\,\mathrm{N/m^3}\right) \times 21.18\,\mathrm{m} \\
&\boxed{P = 29.2\ \mathrm{kW}}
\end{aligned}
$$

Example

Neglecting head losses, determine what horsepower the pump must deliver to produce the flow as shown. Here the elevations at points A, B, C, and D are 35 m, 60 m, 35 m, and 30 m, respectively. The nozzle area is 90 cm^2

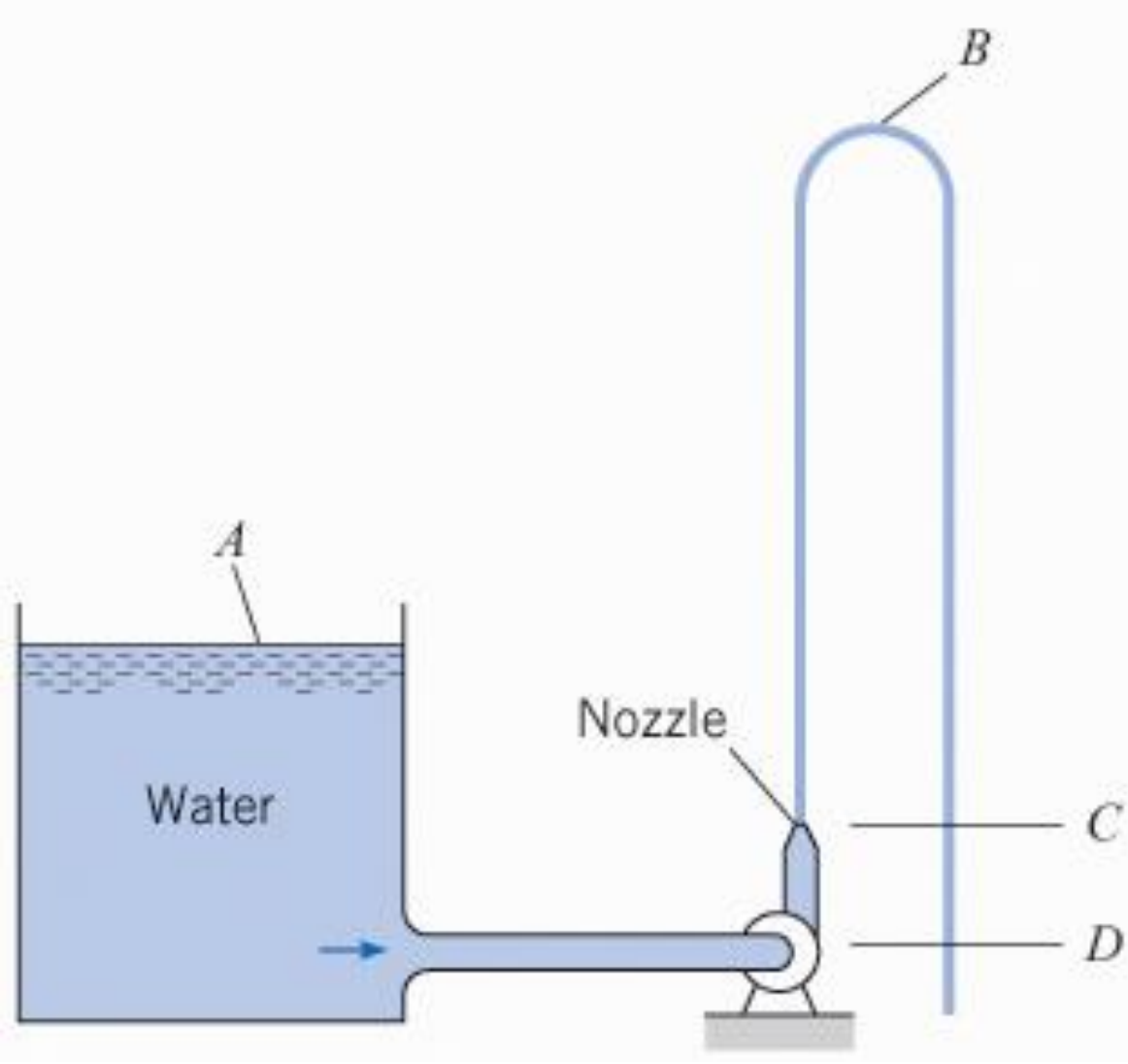

Example

$$
\begin{aligned}
0 + 0 + 35 + h_p &= 0 + 0 + 60; \; h_p = 25 \text{ m} \\
P &= Q\gamma h_p \\
Q &= V_j A_j = 0.0025\text{m}^2 \, V_j \\
V_j &= \sqrt{2g \times (60 - 35)\,\text{m}} = 22.15 \text{ m/s} \\
Q &= 0.055 \text{ m}^3/\text{s}
\end{aligned}
$$

Power equation

$$
\begin{aligned}
P &= Q\gamma h_p \\
P &= 0.055\,\text{m}^3\,/\,\text{s} \times 9800\,\text{N}\,/\,\text{m}^3 \times 25\,\text{m} \\
&\boxed{P = 13.5 \text{ kW}}
\end{aligned}
$$

Hydraulic and Energy Grade Lines

- Engineers find it useful to employ the "energy grade line" (EGL) and the "hydraulic grade line" (HGL) in working with the pipe systems

- These *imaginary lines* help the engineers find the trouble spots in the system (usually points of low pressure)

- HGL is the line that indicates the piezometric head at each location in the system $(p/\gamma + z)$

- EGL is the line that indicates the total head at each location $(V^2/2g + p/\gamma + z)$

Hydraulic and Energy Grade Lines

- As the velocity goes to zero, the HGL and the EGL approach each other
- Thus, in a reservoir,they are identical and lie on the surface

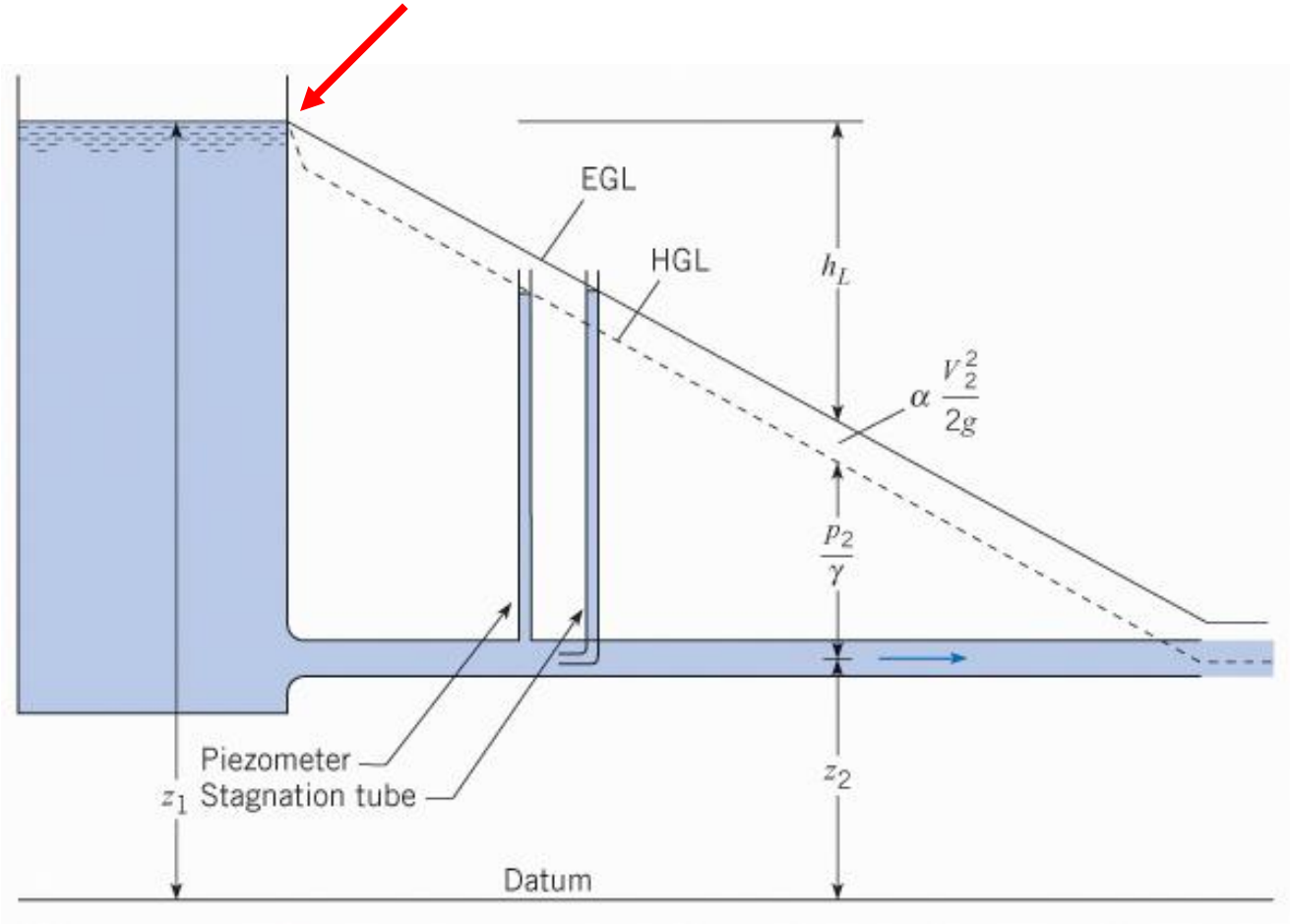

Hydraulic and Energy Grade Lines

Energy Addition by Pumps

A pump causes an abrupt rise in the EGL and HGL by adding energy to the flow

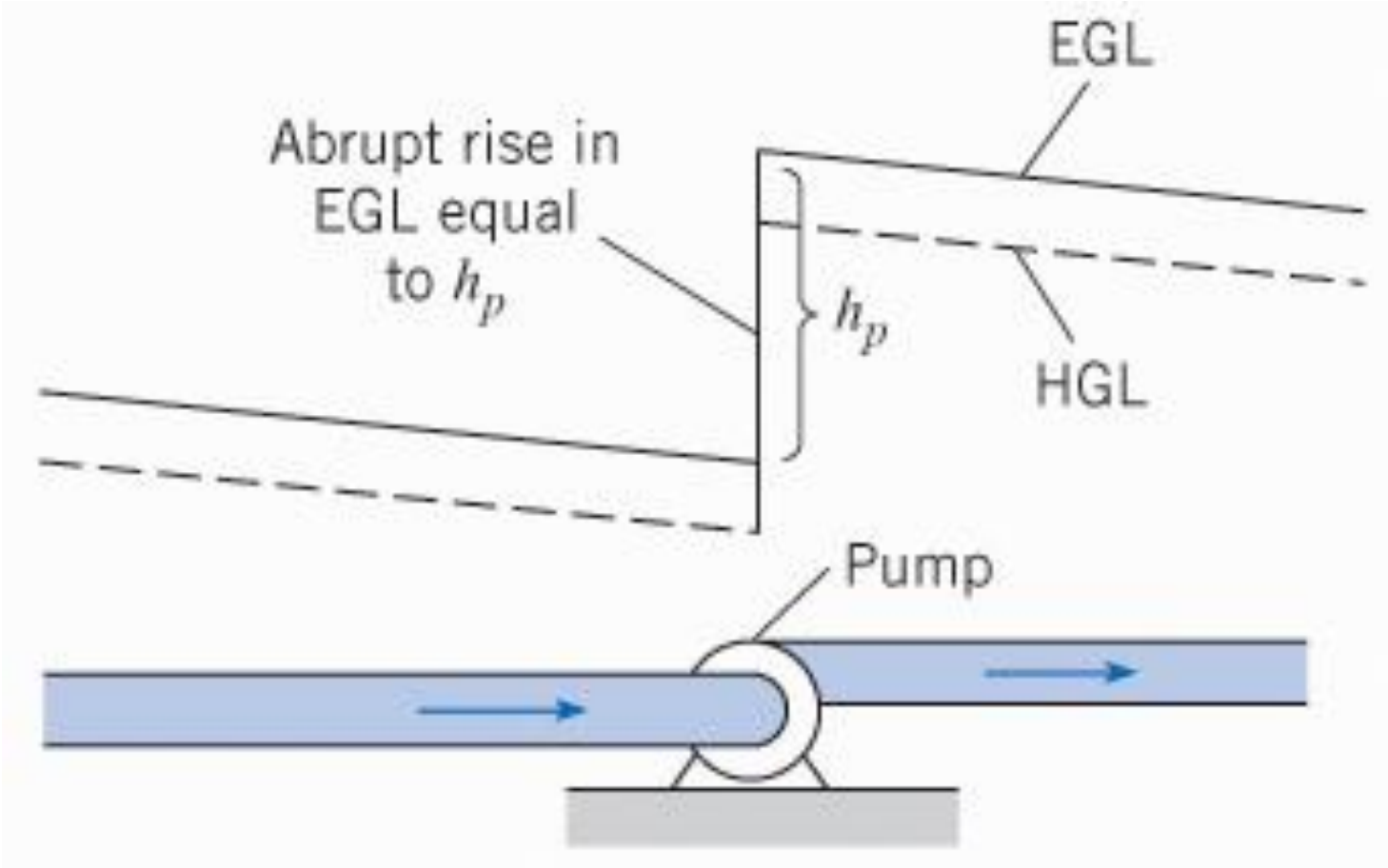

Hydraulic and Energy Grade Lines

Energy Removal by Turbines

A turbine causes an abrupt drop in the EGL and HGL by removing energy from the flow

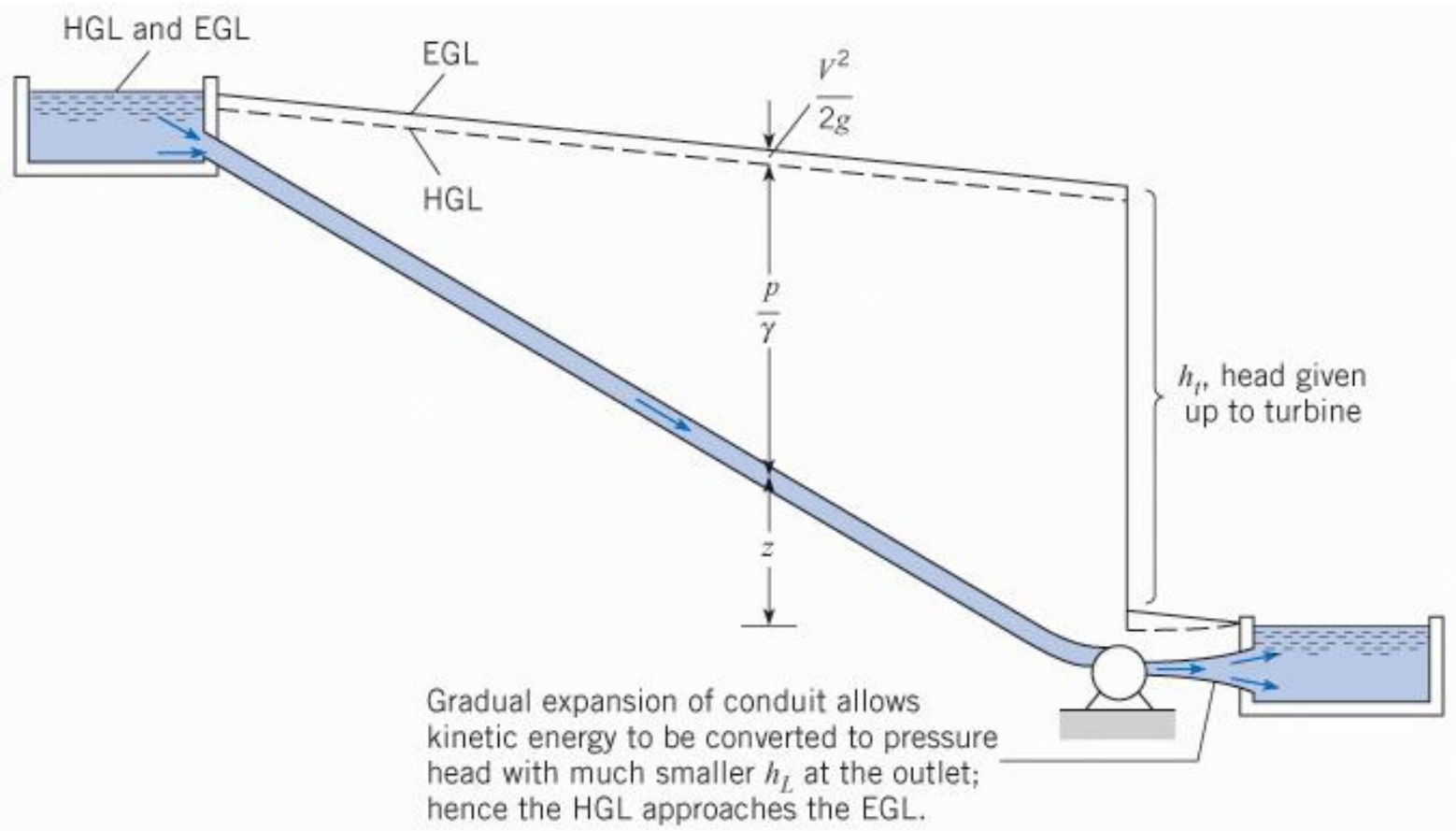

Hydraulic and Energy Grade Lines

Discharge to Atmosphere

When a pipe discharges into the atmosphere the HGL is coincident with the system because $P/\gamma = 0$ at these points

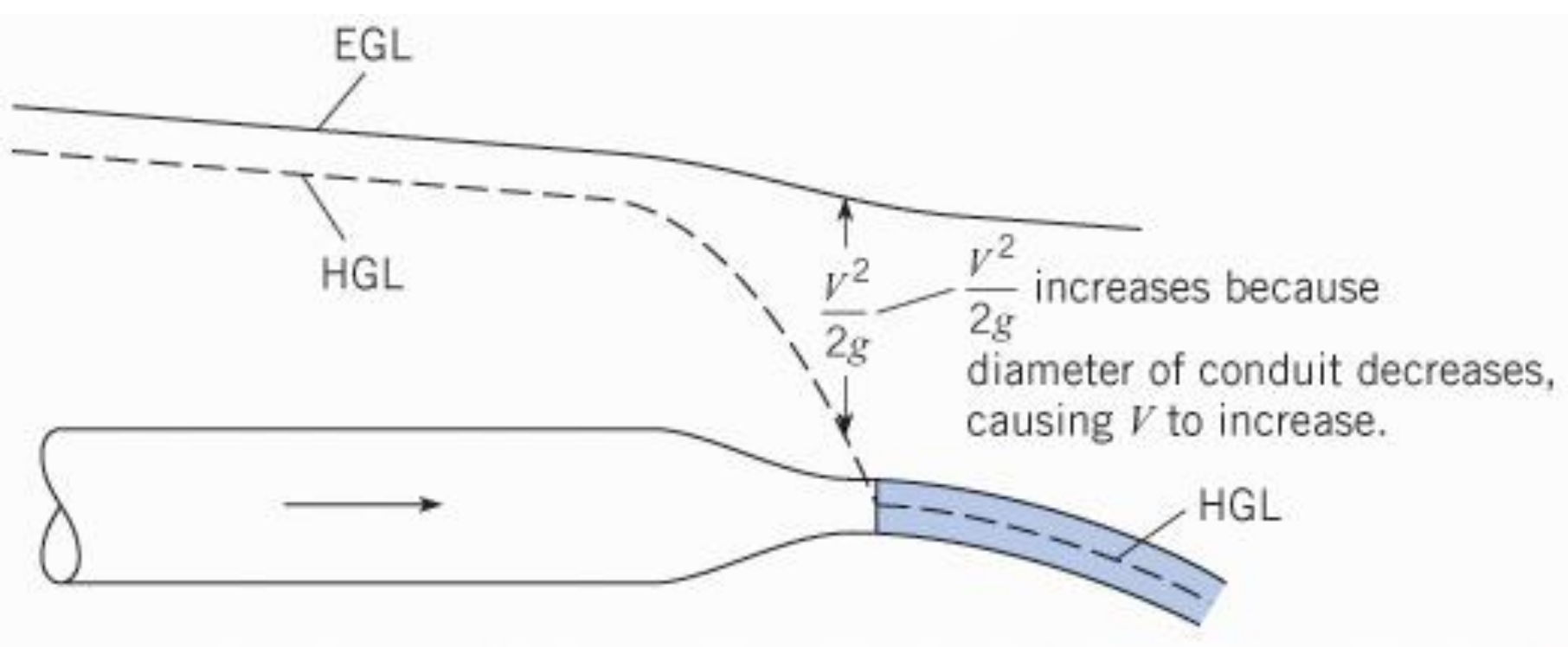

Hydraulic and Energy Grade Lines

Negative Pressure

If the HGL falls below the pipe, then P/ γ is negative indicating subatmospheric pressure and a potential location of cavitation

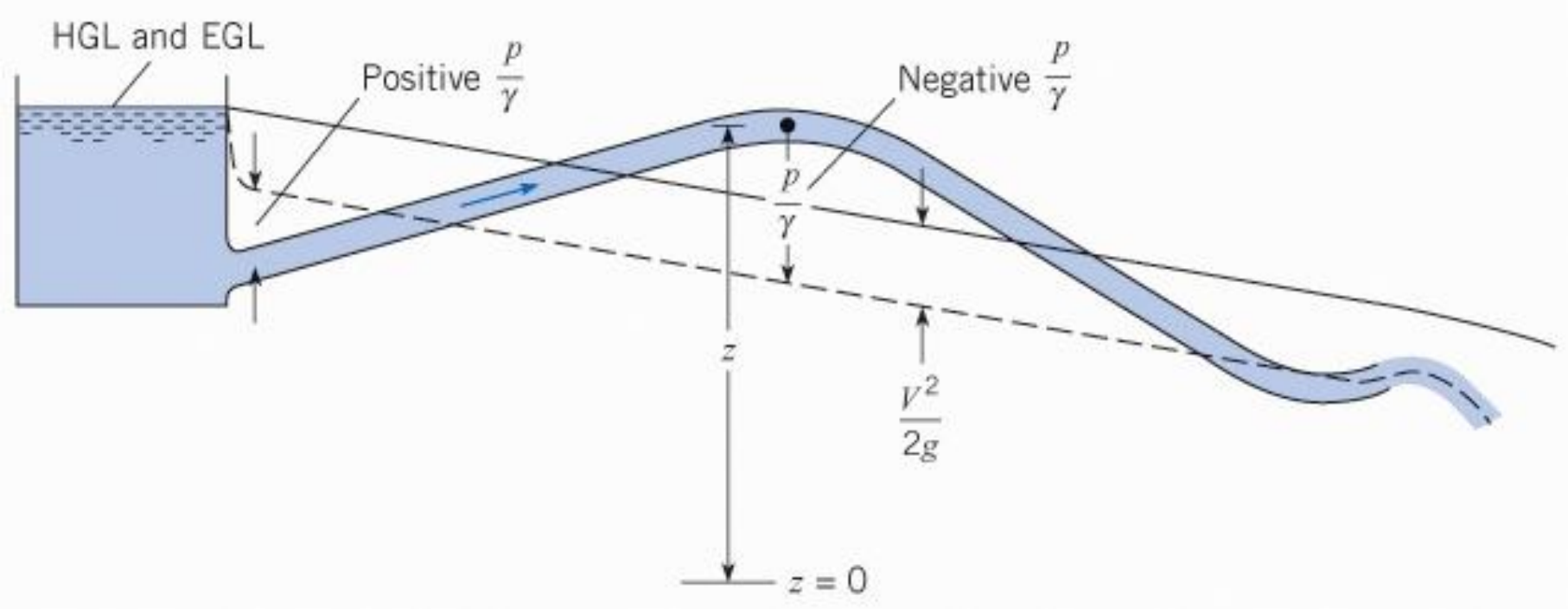

Hydraulic and Energy Grade Lines

Diameter Change

- For a steady flow in a pipe of constant diameter and wall roughness, the slope of the EGL and HGL will be constant
- However, when there is a change in the diameter there will be a change in the EGL and HGL

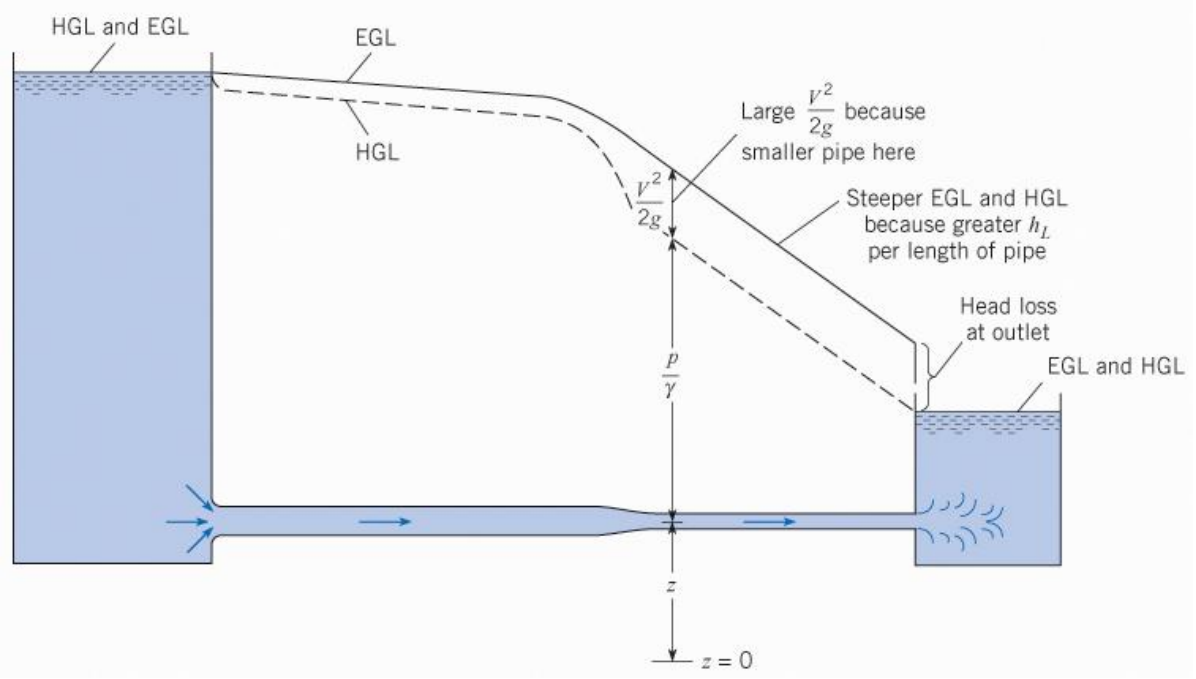

Hydraulic and Energy Grade Lines

A general Case

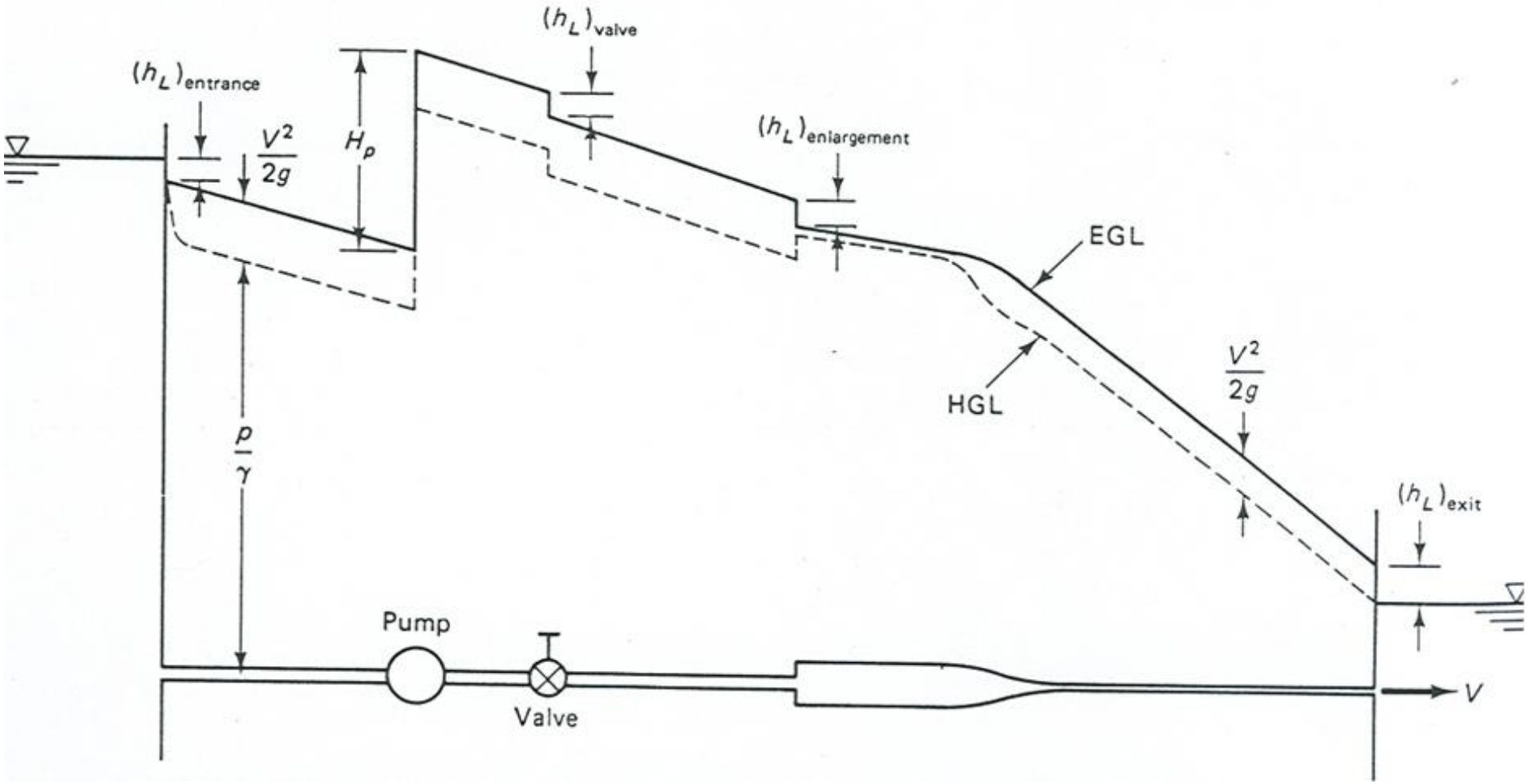

Example

- Water flows from the reservoir through a pipe and then discharges from a nozzle. The head loss in the pipe itself is given as $h_L = 0.025\ (L/D)\ (V^2/2g)$, where L and D are the length and diameter of the pipe and V is the velocity in the pipe

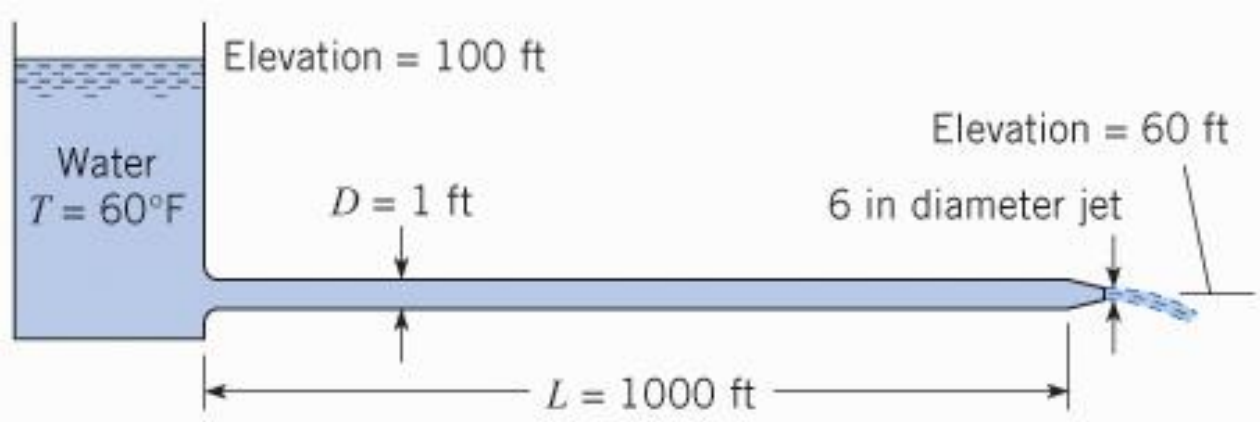

- What is the discharge of water? *Draw the HGL and EGL for the system*

Example

Energy equation. Let the velocity in the 15 cm pipe be V_{15}. Let the velocity in the 30 cm inch pipe be V_{30}.

$$\frac{p_1}{\gamma} + \frac{V_1^2}{2g} + z_1 = \frac{p_2}{\gamma} + \frac{V_{15}^2}{2g} + z_2 + h_L$$

$$0 + 0 + 30 = 0 + \frac{V_{15}^2}{2g} + 20 + 0.025\left(\frac{300}{1}\right)\frac{V_{30}^2}{2g}$$

$$V_{15}A_{15} = V_{30}A_{30}$$

$$V_{15} = V_{30}\frac{A_{30}}{A_{15}}$$

$$V_{15} = V_{30}\frac{30^2}{15^2} = 4V_{30}$$

$$\frac{V_{15}^2}{2g} = 16\frac{V_{30}^2}{2g}$$

Example

Substituting into energy equation

$$
\begin{aligned}
10\,\mathrm{m} &= \left(\frac{V_{30}^2}{2g}\right)(16+7.5) \\
V_{30}^2 &= \left(\frac{10\,\mathrm{m}}{23.5}\right)\left(2\times 9.81\,\mathrm{m}/\mathrm{s}^2\right) \\
V_{30} &= 2.89\ \mathrm{m/s}
\end{aligned}
$$

Flow rate equation

$$
\begin{aligned}
Q &= V_{30}A_{30} \\
&= (2.89\,\mathrm{m}/\mathrm{s})(\pi/4)\,(0.3\,\mathrm{m})^2 \\
&\boxed{Q = 0.204\ \mathrm{m}^3/\mathrm{s}}
\end{aligned}
$$

Example

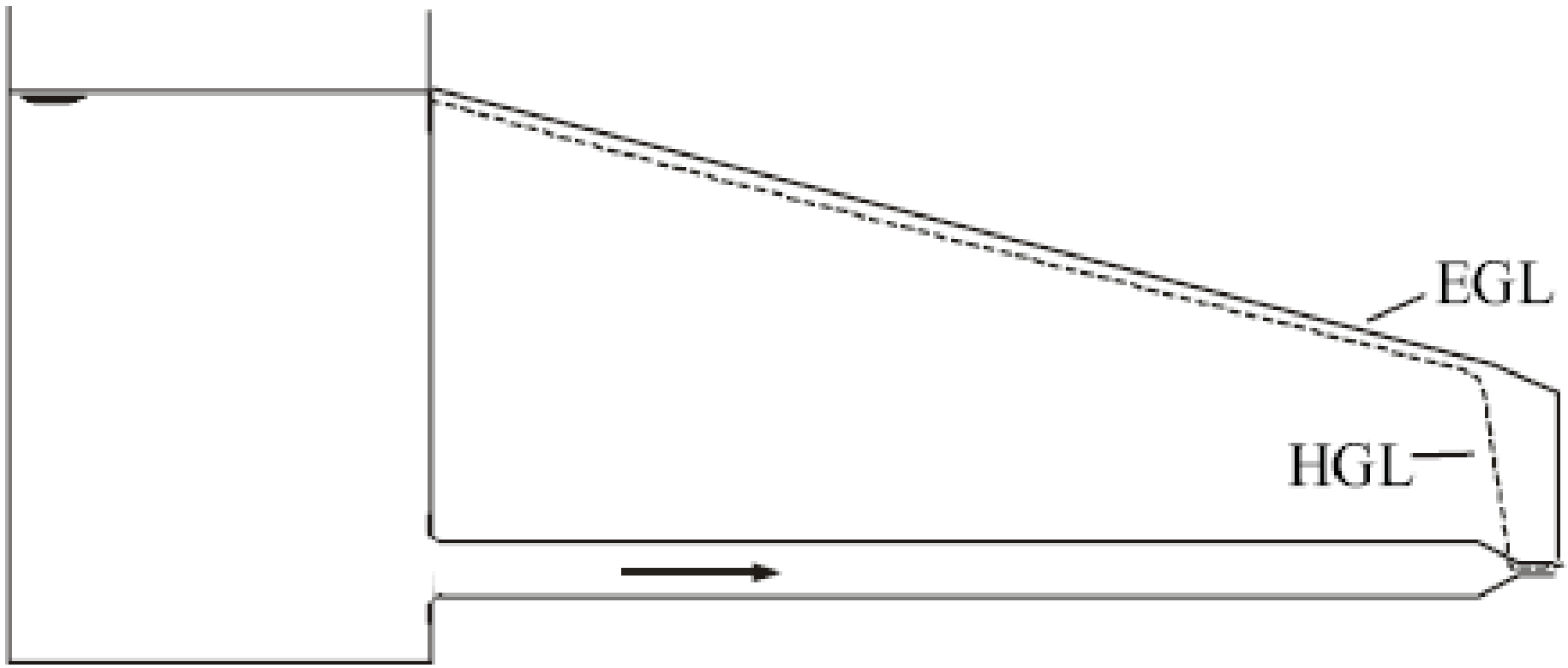

Example

What power must be supplied to the water to pump 0.1 m^3/s at 20°C from the lower to the upper reservoir? Assume that the head loss in the pipes is given by $h_L = 0.018\ (L/D)\ (V^2/2g)$, where L and D are the length and diameter of the pipe and V is the velocity in the pipe. Sketch the HGL and the EGL

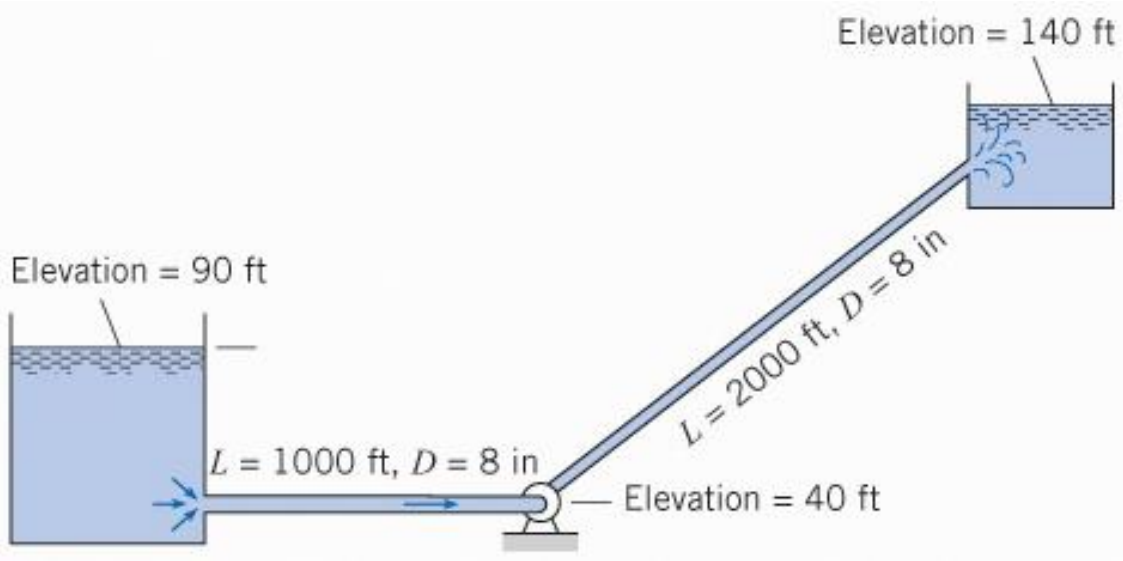

Example

$$
\begin{aligned}
V &= \frac{Q}{A} \\
&= \frac{0.1\,\mathrm{m}^3/\mathrm{s}}{(\pi/4)\times(20/100\,\mathrm{m})^2} \\
&= 3.185\ \mathrm{m/s}
\end{aligned}
$$

Head loss

$$
\begin{aligned}
h_L &= \left(0.018\frac{L}{D}\frac{V^2}{2g}\right) + \left(\frac{V^2}{2g}\right) \\
&= 0.018\left(\frac{900\,\mathrm{m}}{20/100\,\mathrm{m}}\right)\frac{(3.185\,\mathrm{m}/\mathrm{s})^2}{2\,(9.81\,\mathrm{m}/\mathrm{s}^2)} + \frac{(3.185\,\mathrm{m}/\mathrm{s})^2}{2\,(9.81\,\mathrm{m}/\mathrm{s}^2)} \\
&= 42.40\,\mathrm{m}
\end{aligned}
$$

Example

Energy equation

$$\begin{aligned}
\frac{p_1}{\gamma} + \alpha_1 \frac{V_1^2}{2g} + z_1 + h_p &= \frac{p_2}{\gamma} + \alpha_2 \frac{V_2^2}{2g} + z_2 + h_L \\
0 + 0 + 30 + h_p &= 0 + 0 + 45 + 42.40 \\
h_p &= 57.4 \text{ m}
\end{aligned}$$

Power equation

$$\begin{aligned}
P &= Q\gamma h_p \\
&= 0.1\,\mathrm{m}^3/\mathrm{s} \times 9790\,\mathrm{N}/\mathrm{m}^3 \times 57.4\,\mathrm{m} \\
&= 56\,\mathrm{kW}
\end{aligned}$$

$$\boxed{P = 56\,\mathrm{kW}}$$

Example

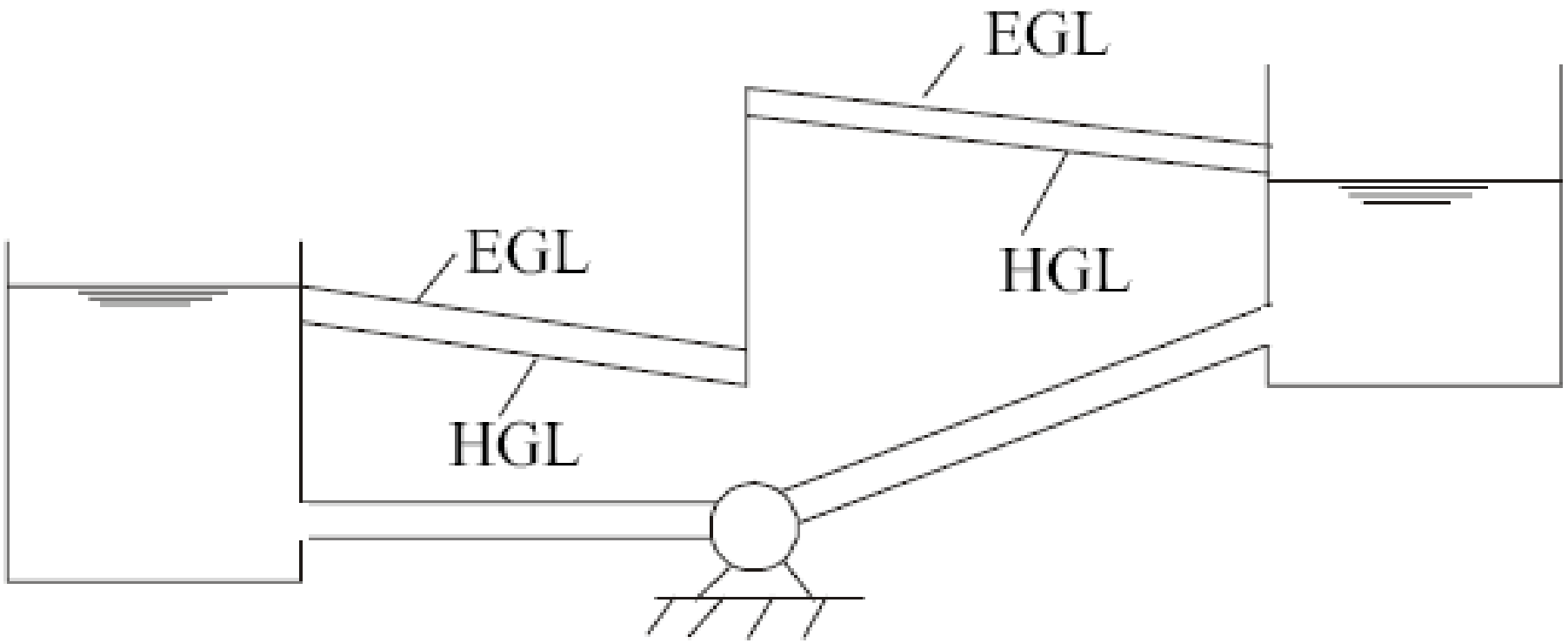

Example

- Water flows from the reservoir on the left to the reservoir on the right at a rate of 0.45 m^3/s. The formula for the head losses in the pipes is $h_L = 0.018 (L/D) (V^2/2g)$. What elevation in the left reservoir is required to produce this flow? Sketch the HGL and the EGL for the system

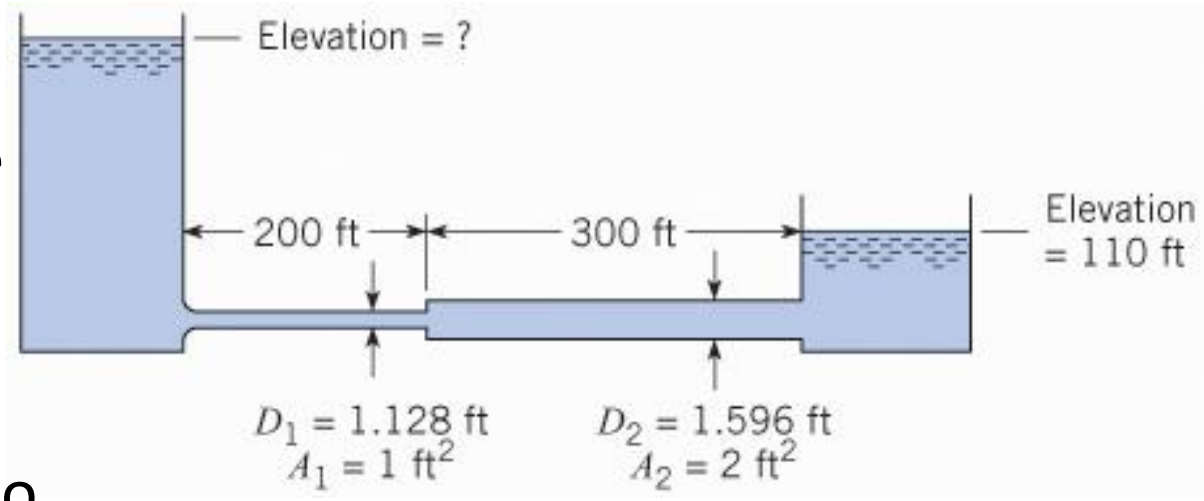

Exmple

Energy equation

$$\frac{p_L}{\gamma} + \frac{V_L^2}{2g} + z_L = \frac{p_R}{\gamma} + \frac{V_R^2}{2g} + z_R + h_L$$

$$0 + 0 + z_L = 0 + 0 + 34 + 0.02\left(\frac{60}{0.344}\right)\frac{V_1^2}{2g}$$

$$+0.02\left(\frac{90}{0.486}\right)\frac{V_2^2}{2g} + \frac{(V_1 - V_2)^2}{2g} + \frac{V_2^2}{2g}$$

Flow rate equation

$$V_1 = \frac{Q}{A_1}$$

$$= \frac{0.45\,\mathrm{m}^3/\mathrm{s}}{0.1\,\mathrm{m}^2} = 4.5\ \mathrm{m/s}$$

$$V_2 = 2.25\ \mathrm{m/s}$$

Example

Substituting into the energy equation

$$z_L = 34 + \left(\frac{0.02}{2 \times 9.81}\right)\left[\left(\frac{60}{0.344}\right)(4.5)^2 + \left(\frac{90}{0.486}\right)(2.25)^2\right] + \left(\frac{(4.5\,\mathrm{m/s} - 2.25\,\mathrm{m/s})^2}{19.62\,\mathrm{m/s}^2}\right) + \frac{(2.25\,\mathrm{m/s})^2}{19.62\,\mathrm{m/s}^2}$$

$$= 34 + 4.56 + 0.26 + 0.26$$

$$\boxed{z_L = 39\ \mathrm{m}}$$